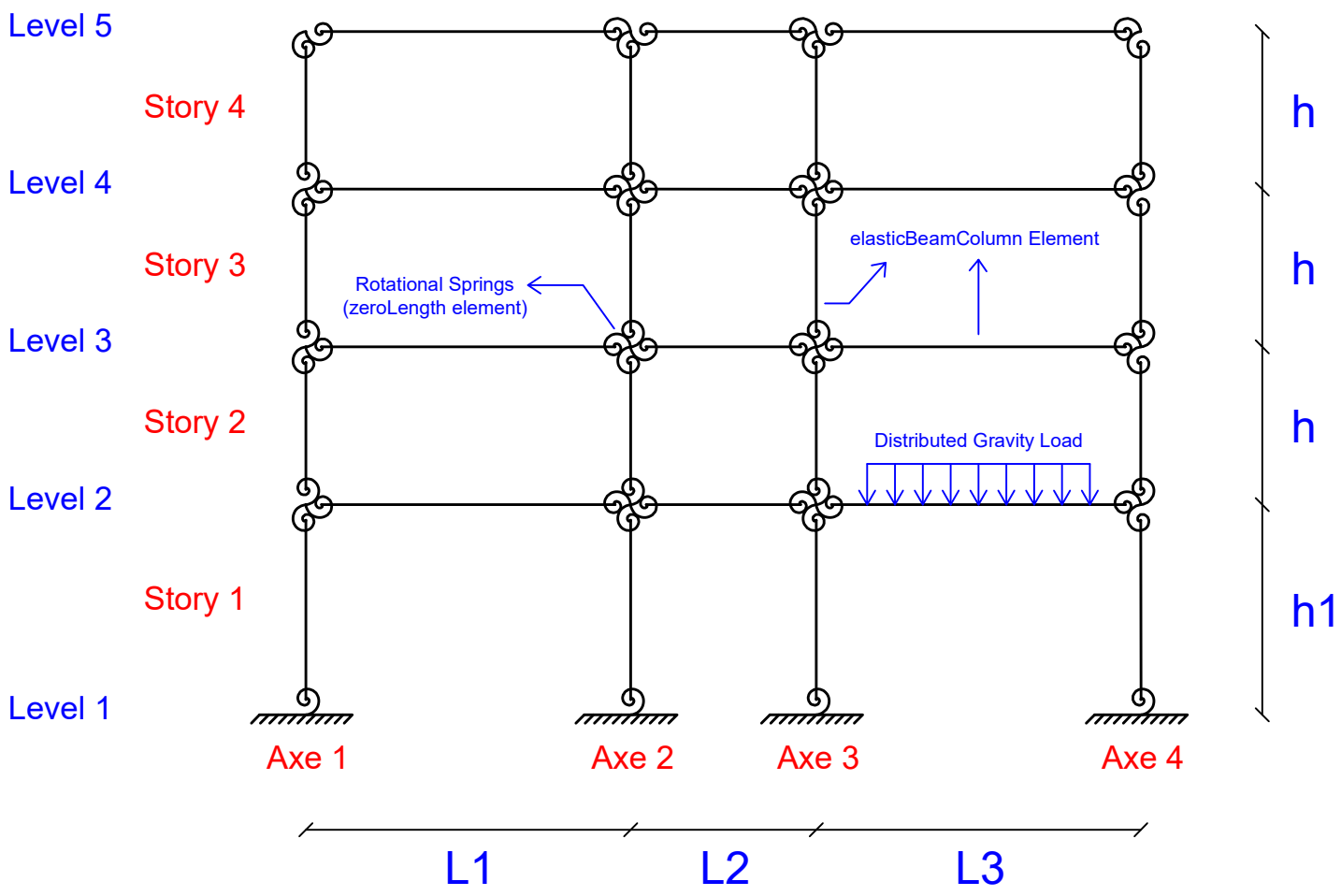

(General Configuration)

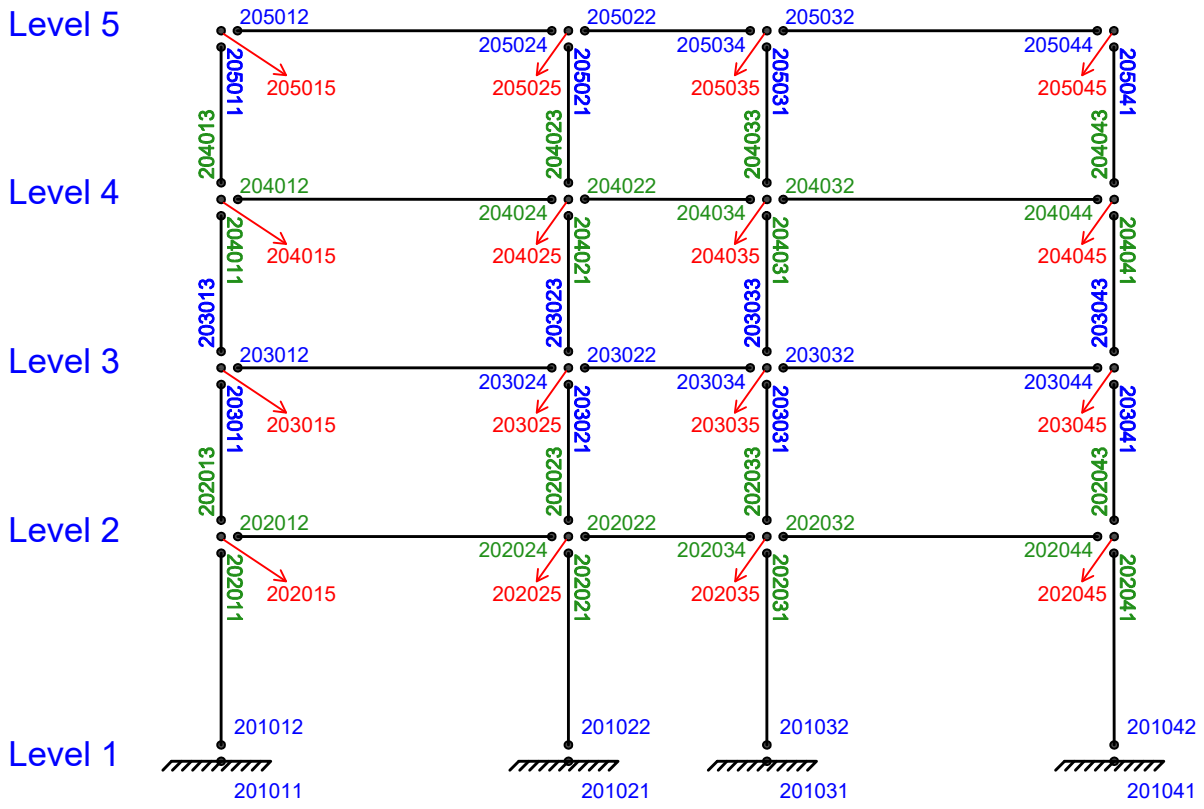
Level 5
Level 4
Level 3
Level 2
Level 1
205012
205022
205032
205024
205034
205044
205015
205025
205035
205045
205011
205021
205031
205041
204013
204023
204033
204043
204012
204022
204032
204024
204034
204044
204015
204025
204035
204045
204011
204021
204031
204041
203013
203023
203033
203043
203012
203022
203032
203024
203034
203044
203015
203025
203035
203045
203011
203021
203031
203041
202013
202023
202033
202043
202012
202022
202032
202024
202034
202044
202015
202025
202035
202045
202011
202021
202031
202041
201012
201022
201032
201042
201011
201021
201031
201041

(Nodes)

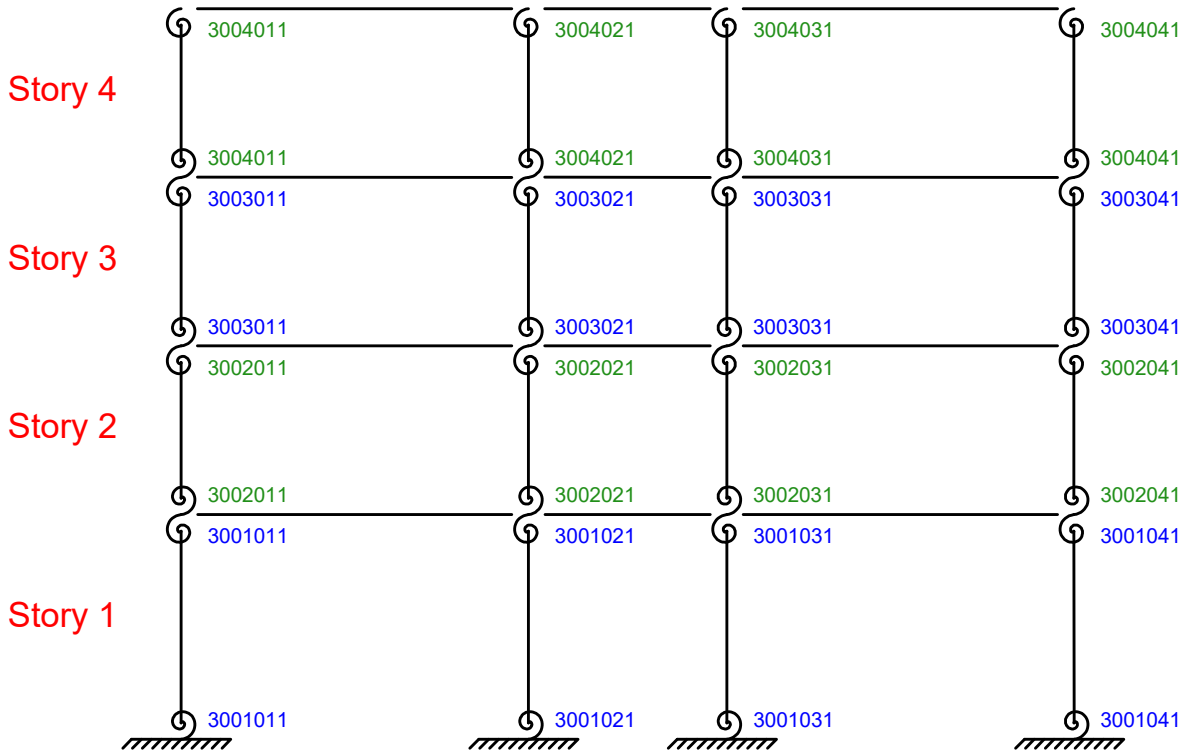

NOTE:

zeroLength element's eleID assigned to the bottom of the column will be the matTag described in the figure above plus 2000000; For example 3002031 will be 5002031
zeroLength element's eleID assigned to the top of the column will be the matTag described in the figure above plus 2000001; For example 3002031 will be 5002032

(Column's Springs)

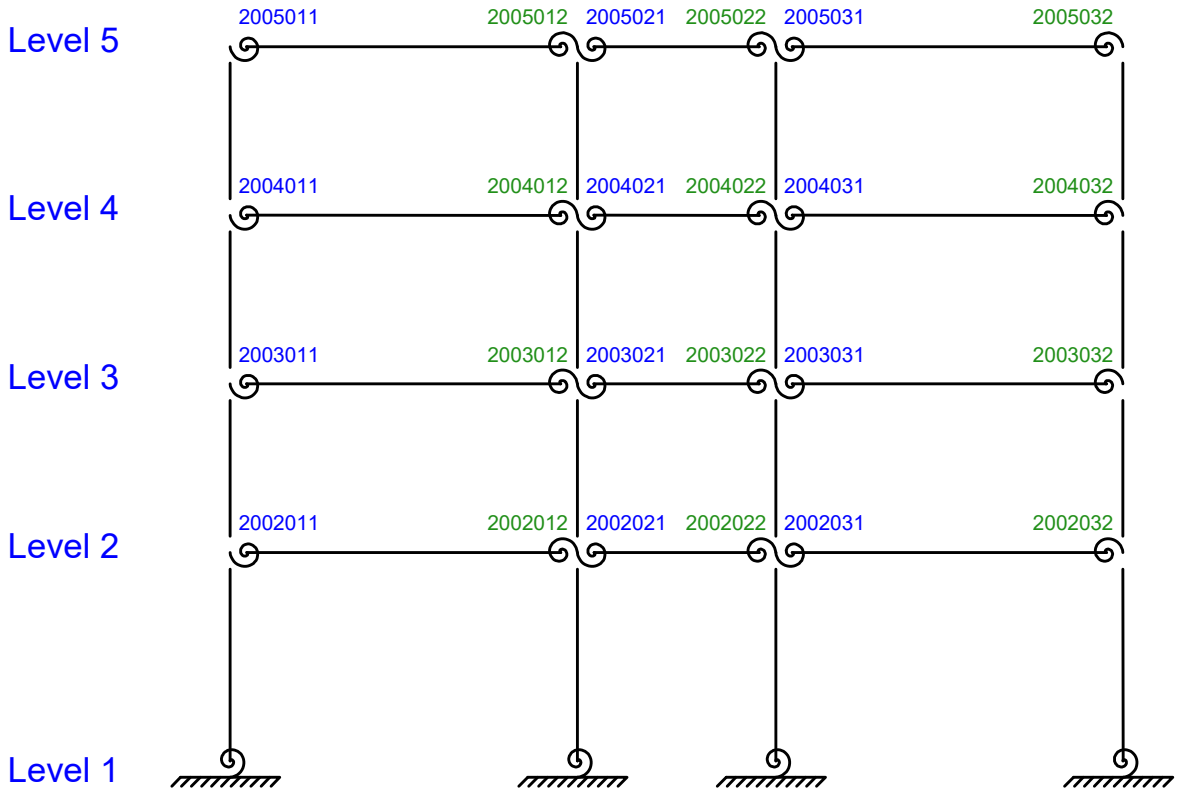

NOTE:

zeroLength element's eleID assigned to the beam will be the matTag described in the figure above plus 2000000; For example 2003012 will be 4003012

(Beam's Springs)

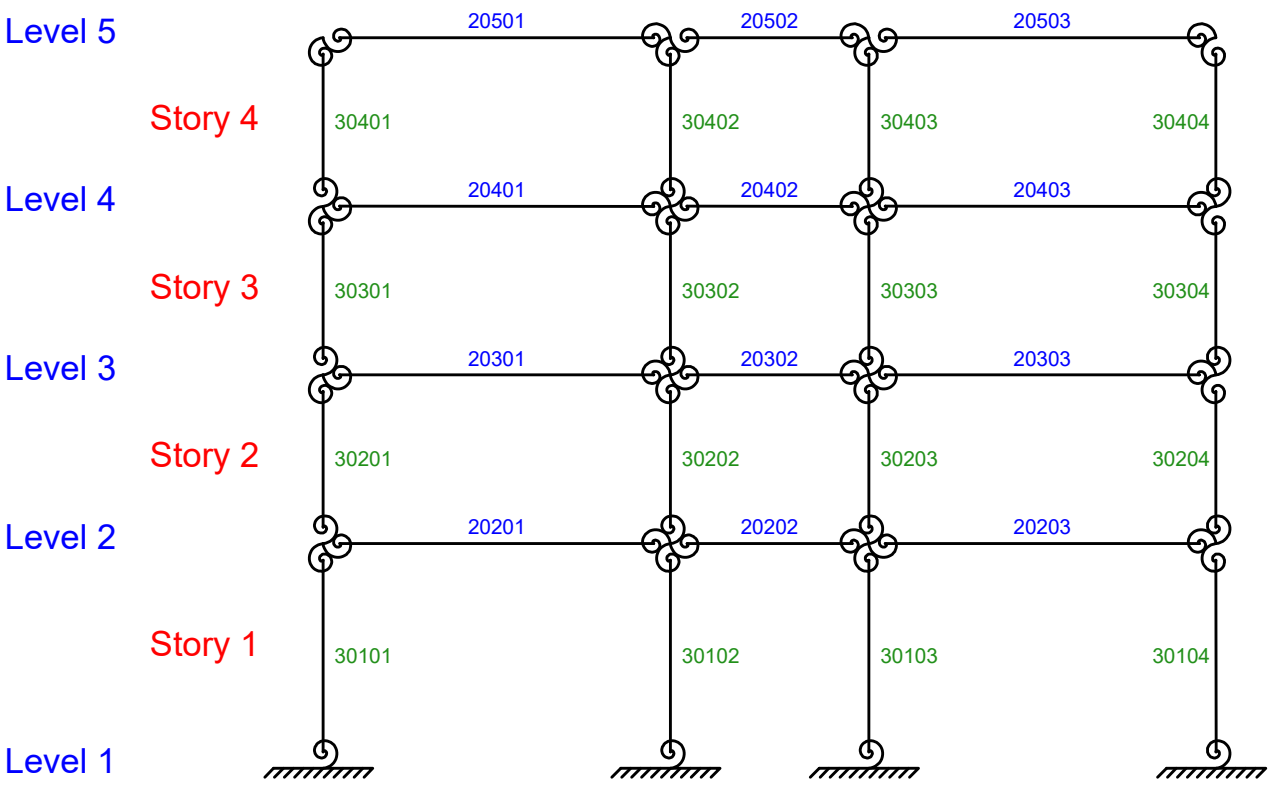

(Beam and Column Elements)